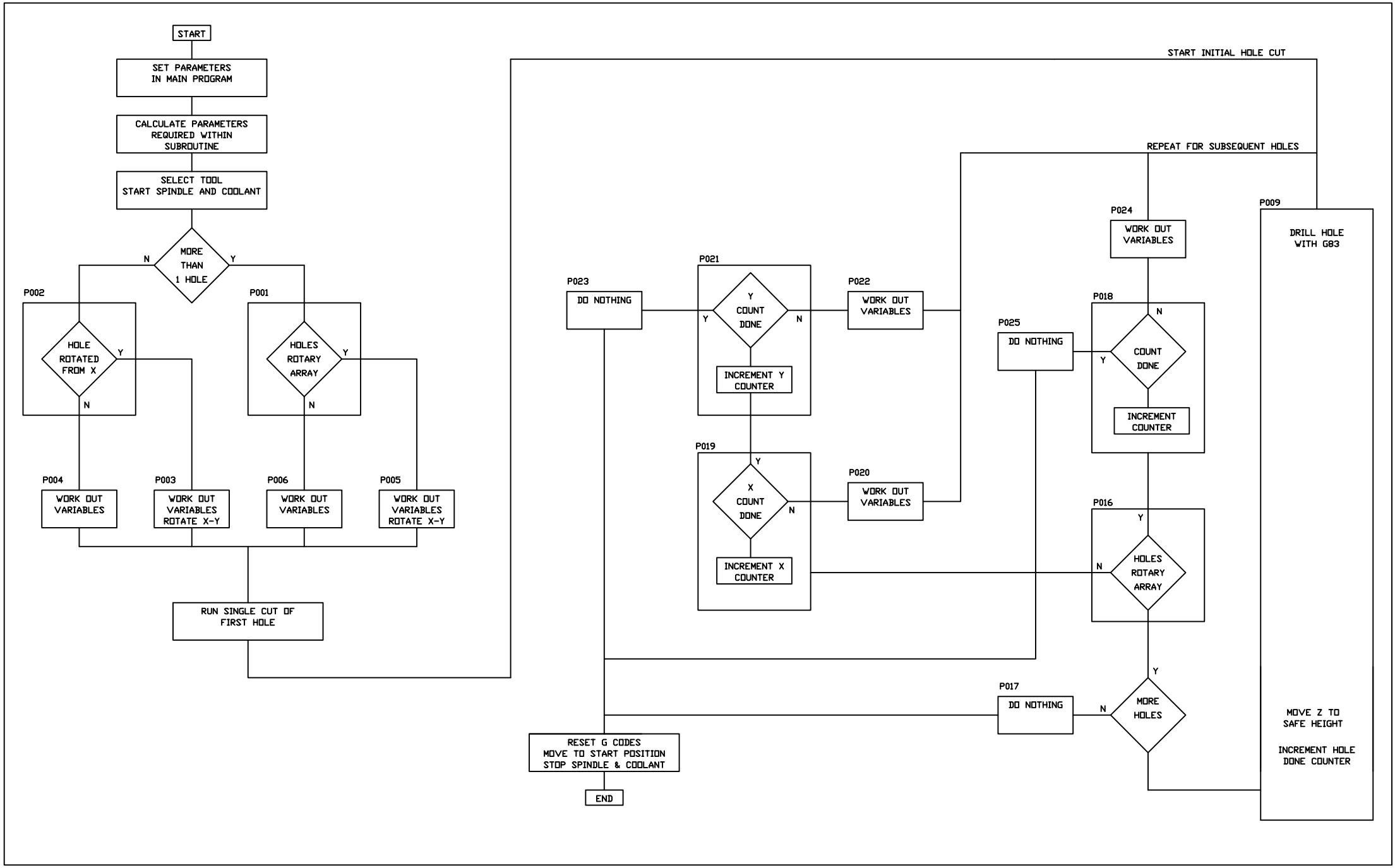
START
SET PARAMETERS IN MAIN PROGRAM
CALCULATE PARAMETERS REQUIRED WITHIN SUBROUTINE
SELECT TOOL START SPINDLE AND COOLANT
MORE THAN 1 HOLE
N
Y
P002
HOLE ROTATED FROM X
P001
HOLES ROTARY ARRAY
P004
WORK OUT VARIABLES
P003
WORK OUT VARIABLES ROTATE X-Y
P006
WORK OUT VARIABLES
P005
WORK OUT VARIABLES ROTATE X-Y
RUN SINGLE CUT OF FIRST HOLE
START INITIAL HOLE CUT
REPEAT FOR SUBSEQUENT HOLES
P023
DO NOTHING
P021
COUNT DONE
INCREMENT Y COUNTER
P022
WORK OUT VARIABLES
P019
X COUNT DONE
INCREMENT X COUNTER
P020
WORK OUT VARIABLES
P024
WORK OUT VARIABLES
P025
DO NOTHING
P018
COUNT DONE
INCREMENT COUNTER
P016
HOLES ROTARY ARRAY
P017
DO NOTHING
MORE HOLES
P009
DRILL HOLE WITH G83
MOVE Z TO SAFE HEIGHT
INCREMENT HOLE DONE COUNTER
RESET G CODES MOVE TO START POSITION STOP SPINDLE & COOLANT
END