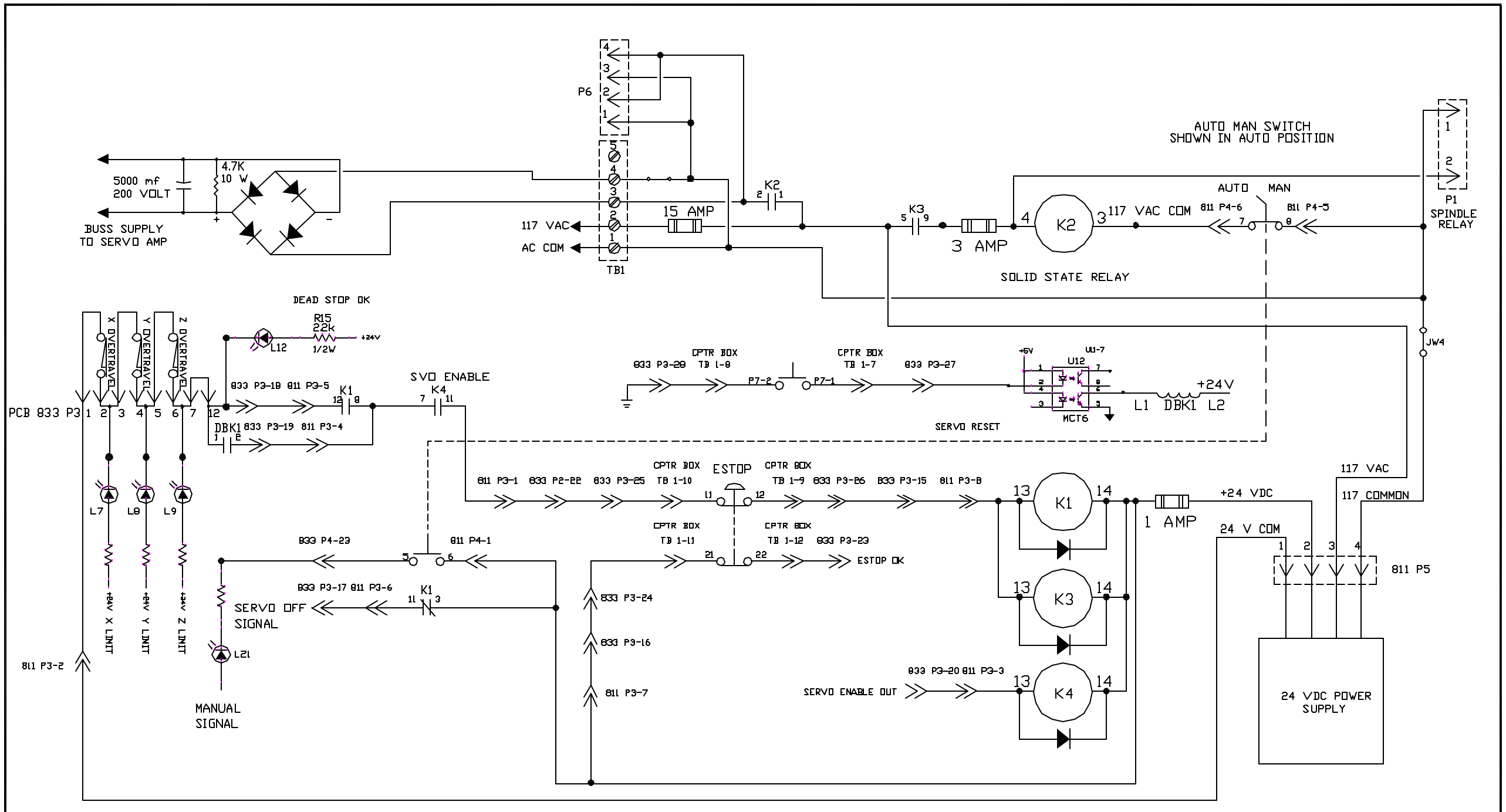

REV.	DATE	DESCRIPTION	BY

ANILAM ELECTRONICS,INC.
MIRAMAR,FLORIDA
U.S.A.

ANILAM

DESCRIPTION

SERIES 1100
SERVO TURN ON CIRCUIT

SCALE NONE		CHECK BY	DATE
DRAWN BY KNJ	DATE 11.1.85	APP'D BY	DATE
DRAWING NO. RM31900321 SHT 2 OF 2			REV. B