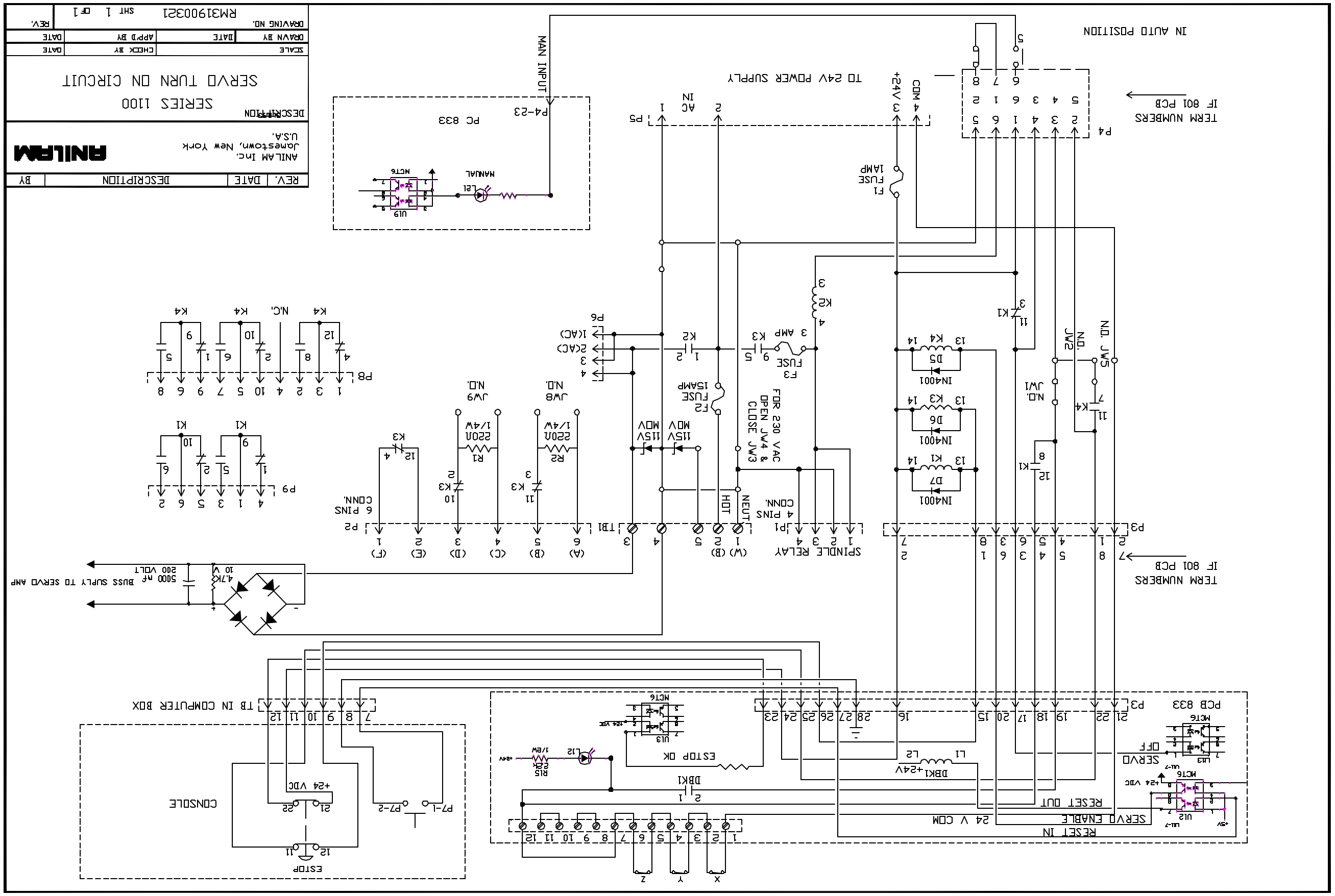
ANILAM Inc.
Jamestown, New York
U.S.A.
REV. | DATE | DESCRIPTION | BY
DESCRIPTION
SERIES 1100
SERVO TURN ON CIRCUIT
SCALE | CHECK BY | DATE
DRAWN BY | DATE | APP'D BY | DATE
DRAWING NO. RM319003 21 SHT 1 OF 1 REV.
TERM NUMBERS IF 801 PCB
IN AUTO POSITION
TO 24V POWER SUPPLY
MAN INPUT
PC 833
P4-23
F1 FUSE 1AMP
+24V
COM
AC IN
P5
P4
P3
P2
P1
TB1
SPINDLE RELAY
4 PINS CONN.
6 PINS CONN.
FOR 230 VAC OPEN JW4 & CLOSE JW3
F2 FUSE 15AMP
F3 FUSE 3 AMP
115V MOV
220Ω 1/4W
R1
R2
JW8 N.O.
JW9 N.O.
N.C. JW5
N.O. JW2
N.O. JW1
IN4001
D1
D2
D3
D4
D5
D6
D7
K1
K2
K3
K4
P6
P8
P9
N.C.
ESTOP
TB IN COMPUTER BOX
CONSOLE
+24 VDC
P7-1
P7-2
BUSS SUPLY TO SERVO AMP
5000 mf
200 VOLT
4.7K
10 W
ESTOP OK
DBK1
DBK1 +24V
L1
L2
R15
2.2K
1/2W
+24V
U13
U12
U11
U10
U9
MCT6
LED
MANUAL
SERVO ENABLE
RESET OUT
RESET IN
24 V COM
SERVO OFF
PCB 833
P3
TERM NUMBERS IF 801 PCB
X
Y
Z